BFB 30 x 30 x 10 MM SERIES

* Bearing Type
  Ball Bearings
* Material
  Impeller & Frame : Plastic(UL 94V-0)
* Lead Wires :
  UL 1571 AWG #28 OR Equivalent
  Red Wire Positive(+)
  Black Wire Negative(-)
* Weight : 10g (0.35 OZ)

■ DIMENSIONS DRAWING

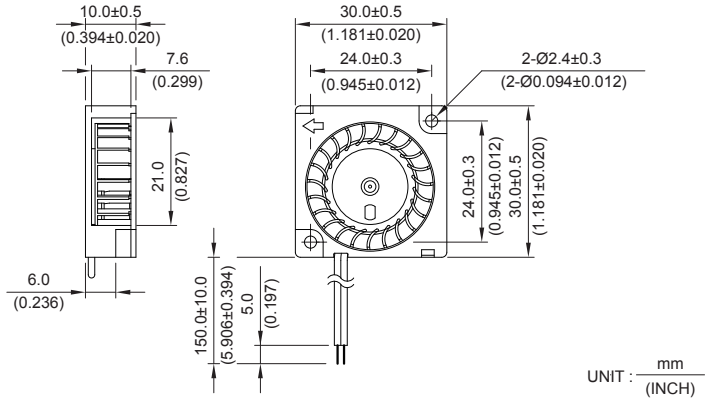

■ P & Q CURVE (AT RATED VOLTAGE)

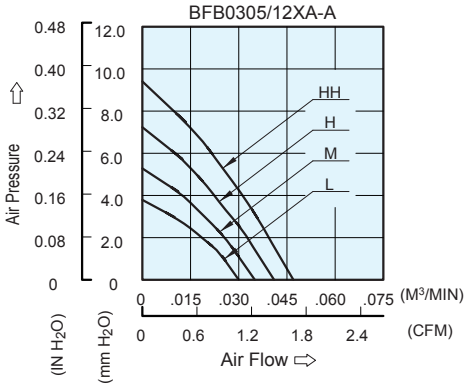

MODEL			Rated Voltage	Operating Voltage Range	Input Current	Input Power	Speed	Maximum Air Flow		Maximum Air Pressure		Noise
PART NO.	REV.	FUNCTION	VDC	VDC	Amp	Watt	R.P.M.	m^3 /min	CFM	mmH_2O	IN H_2O	dB-A
BFB0305LA	-A	-R00 / -F00	5	4.0 to 5.5	0.06	0.30	5500	0.030	1.06	3.66	0.144	24.0
BFB0312LA	-A	-R00 / -F00	12	7.0 to 13.2	0.04	0.48						
BFB0305MA	-A	-R00 / -F00	5	4.0 to 5.5	0.08	0.40	6500	0.035	1.24	5.23	0.206	26.0
BFB0312MA	-A	-R00 / -F00	12	7.0 to 13.2	0.05	0.60						
BFB0305HA	-A	-R00 / -F00	5	4.0 to 5.5	0.11	0.55	7500	0.041	1.45	7.24	0.285	29.0
BFB0312HA	-A	-R00 / -F00	12	7.0 to 13.2	0.06	0.72						
BFB0305HHA	-A	-R00 / -F00	5	4.0 to 5.5	0.15	0.75	8500	0.047	1.66	9.40	0.370	31.0
BFB0312HHA	-A	-R00 / -F00	12	7.0 to 13.2	0.08	0.96						

* Function type is optional.
* The max. air flow and the speed are measured in free air ; max. air pressure is measured at zero air flow.
* Noise is measured in anechoic chamber in free air, one meter from intake side.
* All readings are typical values at rated voltage.
* Specifications are subject to change without notice.

Download from Www.Somanuals.com. All Manuals Search And Download.

Free Manuals Download Website

http://myh66.com

http://usermanuals.us

http://www.somanuals.com

http://www.4manuals.cc

http://www.manual-lib.com

http://www.404manual.com

http://www.luxmanual.com

http://aubethermostatmanual.com

Golf course search by state

http://golfingnear.com

Email search by domain

http://emailbydomain.com

Auto manuals search

http://auto.somanuals.com

TV manuals search

http://tv.somanuals.com