$1.00

OWNER'S GUIDE

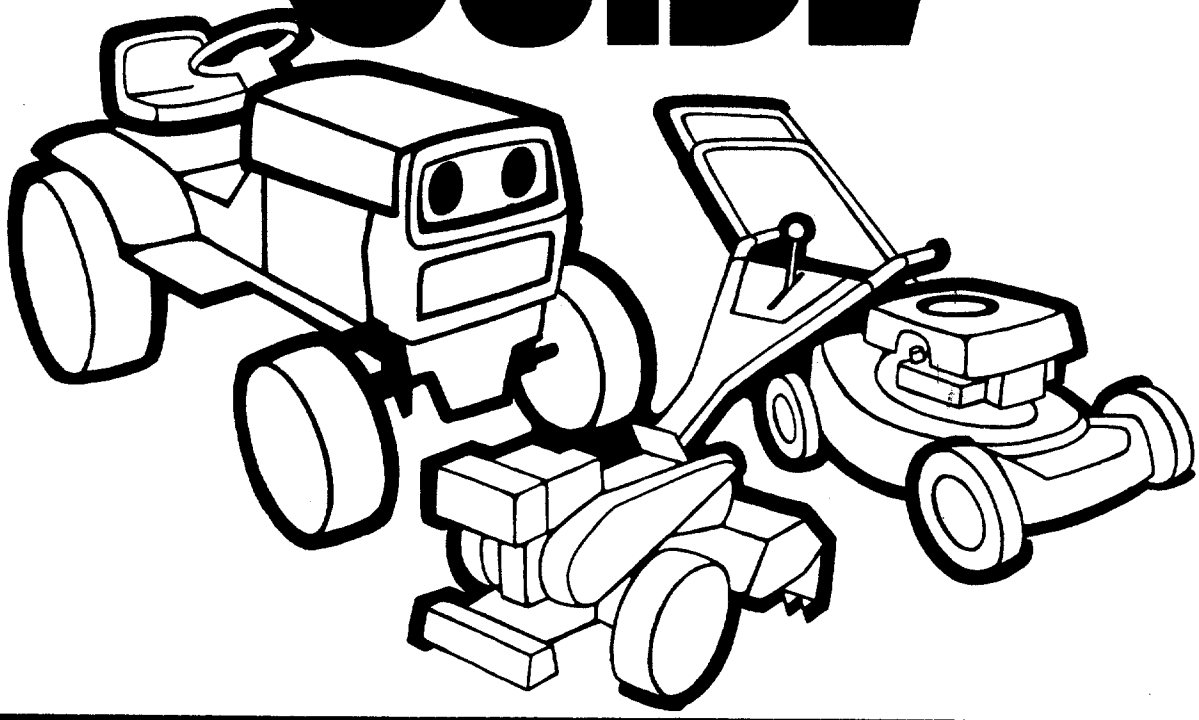

21″ SELF PROPELLED ROTARY MOWER

Agway

Model Number 82-0664

(127-234-019)

IMPORTANT: Read Safety Rules and Instructions Carefully

Thank you for purchasing an American-built product.

FORM NO. 770-5624B

Download from Www.Somanuals.com. All Manuals Search And Download.

INDEX

Dear Customer,

So often throughout the year we are all in a rush to meet our daily obligations.

However, we at MTD Products Inc are taking a quick moment out to say. . .

"Thank you for your business."

Sincerely,
MTD PRODUCTS INC

INSTRUCTIONS GIVEN WITH THIS SYMBOL ARE FOR PERSONAL SAFETY. BE SURE TO FOLLOW THEM.

LIMITED WARRANTY

For one year from the date of original retail purchase, MTD PRODUCTS INC will either repair or replace, at its option, free of charge, F.O.B. factory or authorized service firm, any part or parts found to be defective in material or workmanship. Transportation charges for the movement of any power equipment unit or attachment are the responsibility of the purchaser. Transportation charges for any parts submitted for replacement under this warranty must be paid by the purchaser unless such return is requested by MTD PRODUCTS INC.

This warranty will not apply to any part which has become inoperative due to misuse, excessive use, accident, neglect, improper maintenance, alterations, or unless the unit has been operated and maintained in accordance with the instructions furnished. This warranty does not apply to the engine, motor, battery, battery charger or component parts thereof. Please refer to the applicable manufacturer's warranty on these items.

This warranty will not apply where the unit has been used commercially.

Warranty service is available through your local authorized service dealer or distributor. If you do not know the dealer or distributor in your area, please write to the Customer Service Department of MTD.

The return of a complete unit will not be accepted by the factory unless prior written permission has been extended by MTD.

This warranty gives you specific legal rights. You may also have other rights which vary from state to state.

WARNING: This unit is equipped with an internal combustion engine and should not be used on or near any unimproved forest-covered, brush-covered or grass-covered land unless the engine's exhaust system is equipped with a spark arrester meeting applicable local or state laws (if any). If a spark arrester is used, it should be maintained in effective working order by the operator.

In the State of California the above is required by law (Section 4442 of the California Public Resources Code). Other states may have similar laws. Federal laws apply on federal lands. A spark arrester muffler is available at your nearest engine authorized service center.

Download from Www.Somanuals.com. All Manuals Search And Download.

SLOPE GAUGE

(Keep this sheet in a safe place for future reference.)

Cut Along This Line

USE THIS SHEET AS A GUIDE TO DETERMINE SLOPES WHERE YOU MAY NOT OPERATE SAFELY.

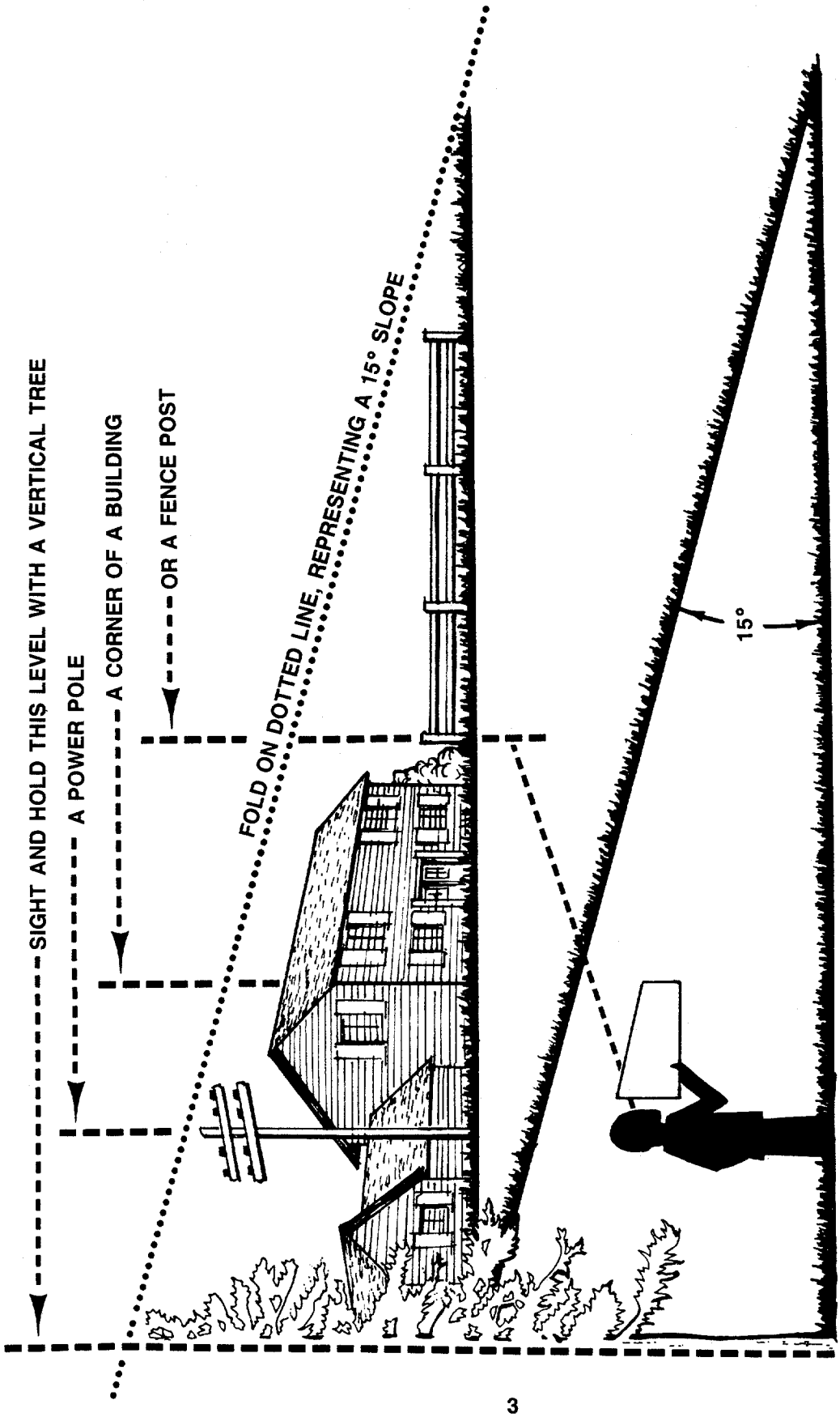

WARNING

Do not mow on inclines with a slope in excess of 15 degrees (a rise of approximately 2½ feet every 10 feet). A riding mower could overturn and cause serious injury. If operating a walk-behind mower on such a slope, it is extremely difficult to maintain your footing and you could slip, resulting in serious injury.

Operate RIDING mowers up and down slopes, never across the face of slopes.
Operate WALK-BEHIND mowers across the face of slopes, never up and down slopes.

Download from Www.Somanuals.com. All Manuals Search And Download.

CONTENTS OF HARDWARE PACK/PARTS IDENTIFICATION

Remove this sheet from your owner's manual and lay the hardware on the illustration for identification purposes. After assembly, keep the Slope Gauge which is on the reverse side of this sheet for future use.
(Hardware pack may contain extra items which are not used on your unit.)

A ATTACHING THE LOWER HANDLE

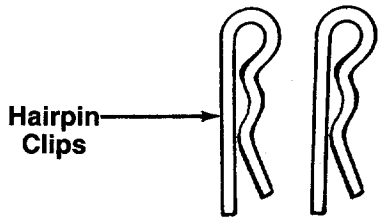

C ATTACHING THE BLADE BRAKE/CLUTCH CABLE

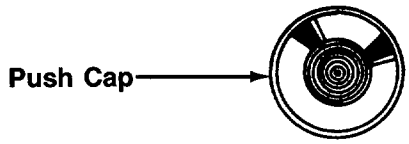

B ATTACHING THE UPPER HANDLE

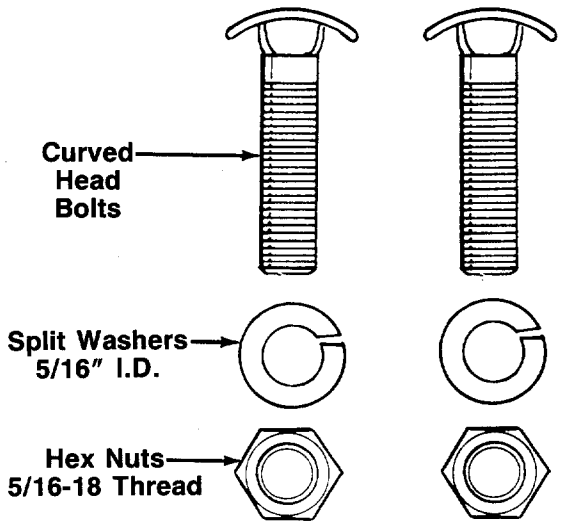

D ATTACHING THE DRIVE CLUTCH CONTROL CABLE

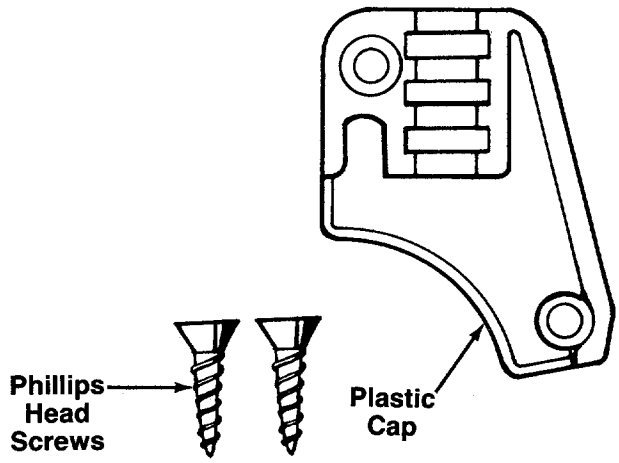

E SECURING THE CABLES

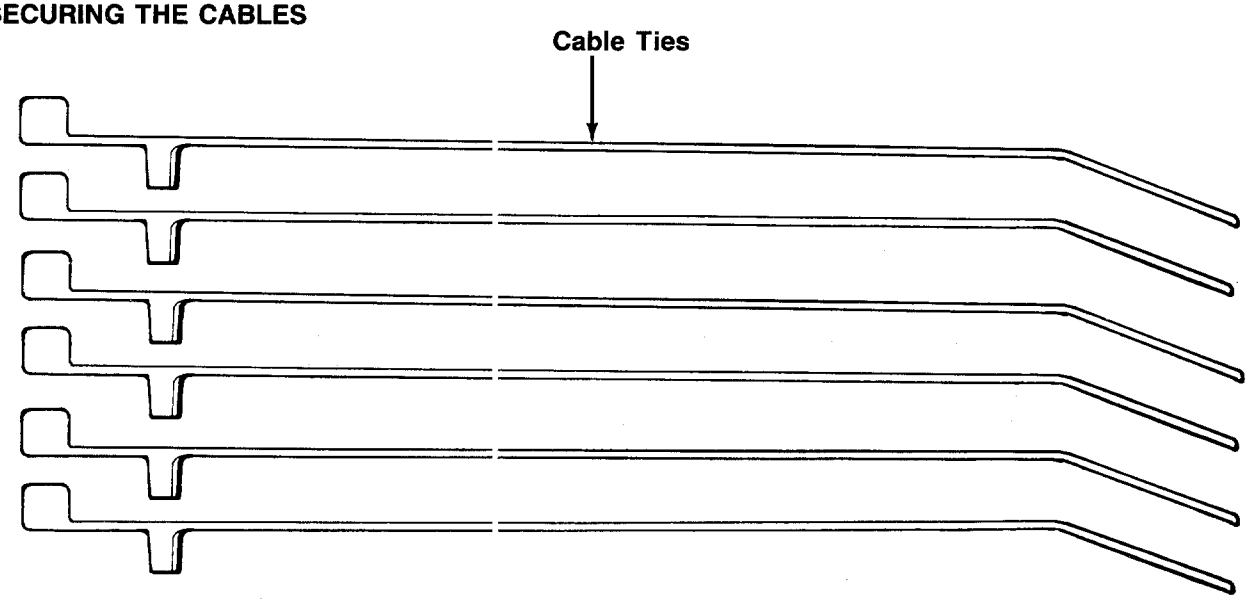

Cut Along This Line

Download from Www.Somanuals.com. All Manuals Search And Download.

IMPORTANT

RULES FOR SAFE OPERATION

THIS SYMBOL POINTS OUT IMPORTANT SAFETY INSTRUCTIONS WHICH, IF NOT FOLLOWED, COULD ENDANGER THE PERSONAL SAFETY AND/OR PROPERTY OF YOURSELF AND OTHERS. READ AND FOLLOW ALL INSTRUCTIONS IN THIS MANUAL BEFORE ATTEMPTING TO OPERATE YOUR LAWN MOWER. FAILURE TO COMPLY WITH THESE INSTRUCTIONS MAY RESULT IN PERSONAL INJURY. WHEN YOU SEE THIS SYMBOL— **HEED ITS WARNING.**

DANGER

Your lawn mower was built to be operated according to the rules for safe operation in this manual. As with any type of power equipment, carelessness or error on the part of the operator can result in serious injury. If you violate any of these rules, you may cause serious injury to yourself or others.

TRAINING

1. Read this owner's manual carefully in its entirety before attempting to assemble or operate this machine. Be completely familiar with the controls and the proper use of this machine before operating it. Keep this manual in a safe place for future and regular reference and for ordering replacement parts.
2. Your rotary mower is a precision piece of power equipment, not a plaything. Therefore, exercise extreme caution at all times.
3. Never allow children to operate a power mower. Only persons well acquainted with these rules of safe operation should be allowed to use your mower.
4. Keep the area of operation clear of all persons, particularly small children and pets. Stop engine when they are in the vicinity of your mower to help prevent blade contact or thrown object injury. Although the area of operation should be completely cleared of foreign objects, an object may have been overlooked and could be accidently thrown by the mower in any direction and cause serious personal injury to the operator or any others allowed in the area.

PREPARATION

1. Thoroughly inspect the area where the equipment is to be used. Remove all stones, sticks, wire, bones and other foreign objects which could be picked up and thrown by the mower in any direction and cause serious personal injury to the operator or any others allowed in the area.
2. Always wear safety glasses or eye shields during operation or while performing an adjustment or repair, to protect eyes from foreign objects that may be thrown from the machine in any direction.
3. Wear sturdy, rough-soled work shoes and close-fitting slacks and shirts to avoid entanglement in the moving parts. Never operate a unit in bare feet, sandals, or sneakers.
4. Check the fuel before starting the engine. Gasoline is an extremely flammable fuel. Do not fill the gasoline tank indoors, while the engine is running, or until engine has been allowed to cool for two minutes after running. Replace gasoline cap securely and wipe off any spilled gasoline before starting the engine as it may cause a fire or explosion.
5. Disengage the self-propelled mechanism or drive clutch on units so equipped before starting the engine.
6. The blade control handle is a safety device. Never attempt to bypass its operation. Doing so makes the safety device inoperative and may result in personal injury through contact with the rotating blade. The blade control handle must operate easily in both directions.
7. Never attempt to make a wheel or cutting height adjustment while the engine is running.
8. Never operate the equipment in wet grass. Always be sure of your footing. A slip and fall can cause serious personal injury. Keep a firm hold on the handle and walk, never run. Mow only in daylight or in good artificial light.
9. For your safety, use the slope gauge included as part of this manual to measure slopes before operating this unit on a sloped or hilly area. If the slope is greater than 15° as shown on the slope gauge, do not operate this unit on that area or serious injury could result.

OPERATION

1. Do not change the engine governor settings or overspeed the engine. Excessive engine speeds are dangerous.
2. Do not put hands or feet near or under rotating parts. Keep clear of the discharge opening at all times as the rotating blade can cause injury.
3. Stop the blade when crossing gravel drives, walks or roads.
4. After striking a foreign object, stop the engine, remove the wire from the spark plug, and thoroughly inspect the mower for any damage. Repair the damage before restarting and operating the mower.
5. If the equipment should start to vibrate abnormally, stop the engine and check immediately for the cause. Vibration is generally a warning of trouble.
6. Shut the engine off and wait until the blade comes to a complete stop before removing the grass catcher or unclogging the chute. The cutting blade continues to rotate for a few seconds after the engine is shut off. Never place any part of the body in the blade area until you are sure the blade has stopped rotating.
7. Before cleaning, repairing or inspecting, make certain the blade and all moving parts have stopped. Disconnect the spark plug wire, and keep the wire away from the spark plug to prevent accidental starting.
8. Do not run the engine indoors.
9. Mow across the face of slopes, never up-and-down. Exercise extreme caution when changing direction on slopes. Do not mow excessively steep slopes. Always be sure of your footing. A slip and fall can cause serious personal injury.
10. Never operate mower without proper guards, plates or other safety protective devices in place.

MAINTENANCE AND STORAGE

1. Check the blade and engine mounting bolts at frequent intervals for proper tightness.
2. Keep all nuts, bolts, and screws tight to be sure the equipment is in safe working condition.
3. Never store the equipment with gasoline in the tank inside of a building where fumes may reach an open flame or spark. Allow the engine to cool before storing in any enclosure.
4. To reduce fire hazard, keep the engine free of grass, leaves, or excessive grease.
5. Check the grass catcher bag frequently for wear or deterioration. For safety protection, replace only with new bag meeting original equipment specifications.

Download from Www.Somanuals.com. All Manuals Search And Download.

Rules for Safe Operation (Continued)

BLADE BRAKE/CLUTCH MAINTENANCE

NOTE: Any required repair work on the blade brake/clutch should be performed by an authorized service dealer. If you cannot locate an authorized service dealer, contact the manufacturer.

1. **The blade brake/clutch hand control is a safety device. Never attempt to bypass its operation.** Doing so makes the safety device inoperative and may result in personal injury through contact with the rotating blade. This hand control must operate freely in both directions.
2. Striking a solid object can cause damage to the blade brake/clutch or to the engine crankshaft. Extensive vibration of the mower during operation is an indication of damage and the unit should be promptly inspected and repaired.
3. A leak in the lower engine crankshaft oil seal could expose the blade brake/clutch friction pads to excess oil resulting in blade or brake slippage, which could increase the stopping time of the blade. Oil collection on the floor beneath the mower during storage may be an indication of an oil seal leak. The unit should be checked by an authorized service dealer.
4. Periodically inspect the inner control cable in the area where it attaches to the hand control. If the cable becomes frayed, it could cause the blade brake/clutch to operate improperly. Also, be careful to avoid pinching the blade brake/clutch control cable when storing the handle.

IMPORTANT: This unit is shipped WITHOUT GASOLINE or OIL. After assembly, service engine with gasoline and oil as instructed in the separate engine manual packed with your unit.

NOTE: Reference to right or left hand side of the mower is observed from the operating position.

ASSEMBLY INSTRUCTIONS

Tools Required for Assembly

(1) Pair of Pliers
(1) Phillips Head Screwdriver
(1) 1/2" Wrench*
(1) 5/16" Wrench or Nutdriver*
*Or one 6" Adjustable Wrench.

UNPACKING

1. Remove the lawn mower from the carton by opening the top flaps and lifting the unit out. Be careful of the staples. Make certain all parts and literature have been removed from the carton before the carton is discarded.
2. Disconnect and ground the spark plug wire against the engine. Check beneath the deck for any cardboard packaging. Remove if present.
3. Stretch out all control cables and place on the floor. Be careful not to bend or kink the cables at any time during assembly.
4. Remove page four from this manual and lay the contents of the hardware pack on the illustration for identification.

ATTACHING THE LOWER HANDLE (Hardware A)

1. Place lower handle in position over weld pins in handle mounting brackets on the rear of the deck. Make certain the instruction label on the lower handle can be read from the operating position.
2. Using a pair of pliers, squeeze one leg of the lower handle against the handle mounting bracket. Insert the hairpin clip into the **inner** hole on the weld pin. See figure 1. Repeat on other side.

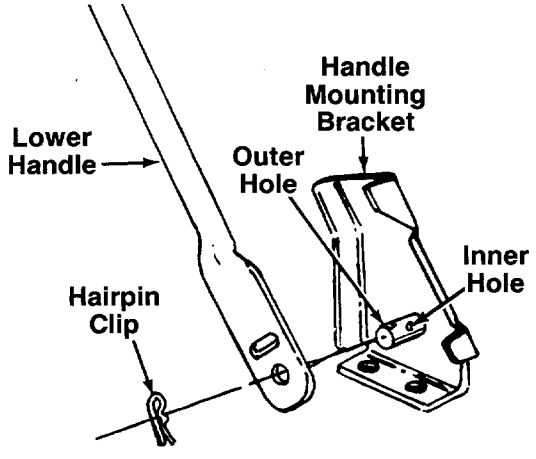

FIGURE 1.

NOTE

There are two (2) holes in the handle mounting brackets. Place hairpin clips in the inner hole for operation. The outer hole is for storage.

Download from Www.Somanuals.com. All Manuals Search And Download.

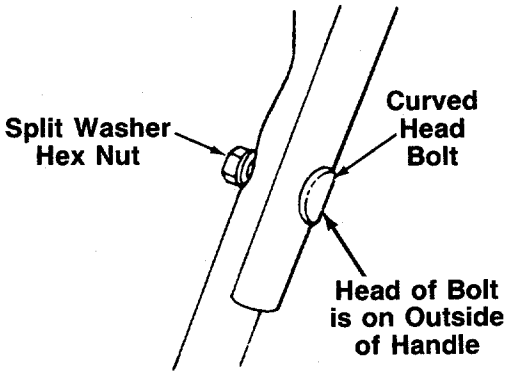

FIGURE 2.

ATTACHING THE UPPER HANDLE (Hardware B)

Place upper handle in position over lower handle. The label on the throttle control housing and the control lever must be facing up. Secure upper handle with two curved head bolts, split washers and hex nuts. See figure 2.

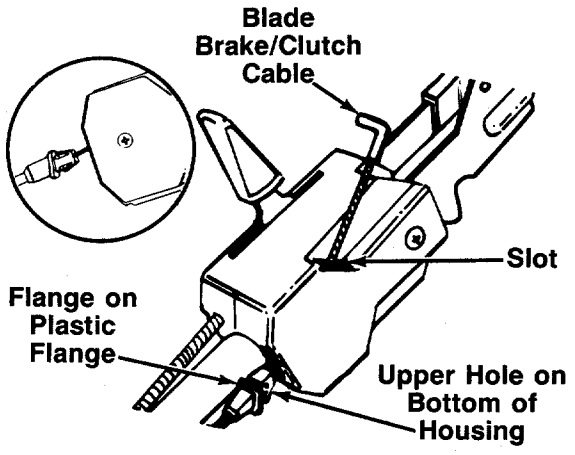

FIGURE 3.

ATTACHING THE BLADE BRAKE/CLUTCH CABLE (Hardware C)

The blade brake/clutch cable is the cable which has an "L" fitting on the loose end, and is attached to the blade brake/clutch underneath the deck.

1. Route the blade brake/clutch cable under the lower handle and inside the handle mounting bracket. Place end of cable into the upper hole on the bottom of the control housing, and through the slot on the side of the housing as shown. The angle of the plastic flange must be positioned downward as shown in figure 3. Be careful not to bend or kink the cable at any time.
2. Push the plastic flange until it locks into the control housing.

WARNING

The cable must be assembled as shown for proper blade brake/clutch operation.

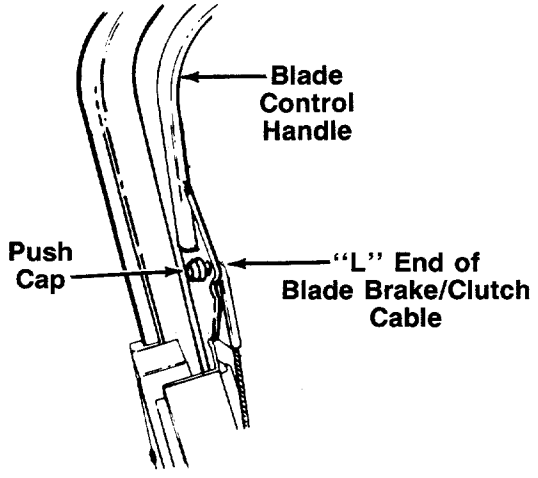

FIGURE 4.

3. Insert the "L" end of the blade brake/clutch cable into the hole in the blade brake/clutch control handle, from the inside to the outside as shown in figure 4. Hold the end of the cable, and press push cap on by hand.

Download from Www.Somanuals.com. All Manuals Search And Download.

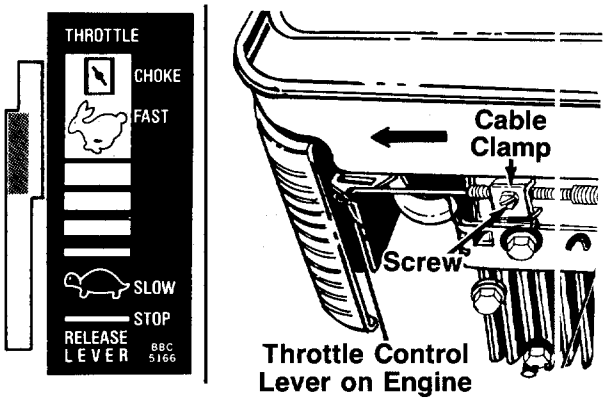

FIGURE 5.

ATTACHING THE THROTTLE CABLE

1. Move throttle control lever until it stops in FAST position (do not push all the way forward to CHOKE position). See figure 5.
2. The throttle control cable is attached to the upper handle. Route the throttle control cable under the lower handle and inside the handle mounting bracket. Hook the "Z" end of the throttle control cable into the hole in the control lever on the engine. See figure 5.
3. Using a 5/16" wrench or nutdriver, remove the screw on the cable clamp shown in figure 5. Slip the control casing under the clamp. Replace the screw (casing should be above the screw), but do not tighten screw (cable must still move freely beneath the clamp).
4. Slide the control lever on the engine as far toward the outside of the engine as it will go easily (just until resistance is felt) as shown in figure 5. (Do not force it into the extreme outside position, which is the CHOKE position.) Tighten the screw to secure the throttle control cable in this position.

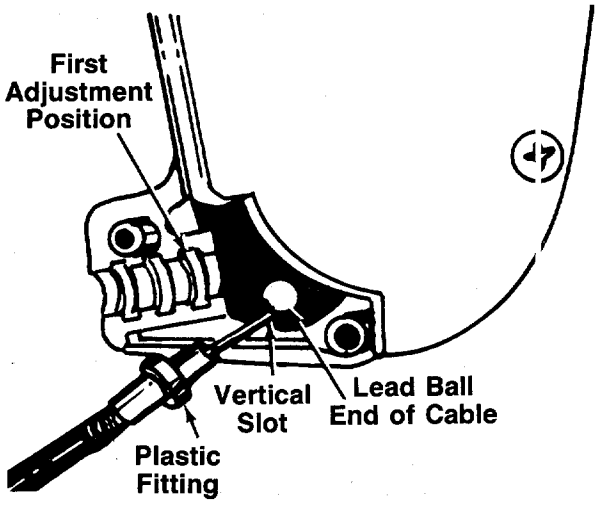

FIGURE 6.

ATTACHING THE DRIVE CLUTCH CONTROL CABLE (Hardware D)

The drive clutch control cable is attached to the deck. Attach the cable to the lever in the clutch control housing, located in the middle of the upper handle, as follows.

1. Place the lead ball end of the cable into the fitting provided in the end of the clutch control lever. Slip the braided wire into the vertical slot as shown in figure 6.

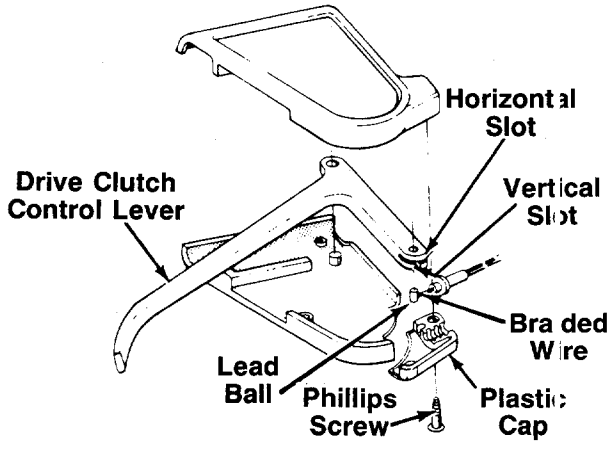

FIGURE 7.

2. Slide the braided wire around in the horizontal slot. See figure 7.
3. Place the plastic fitting on the control cable into the first adjustment position in the clutch control housing. See figure 6.
4. Secure the plastic cap to the clutch control housing using the two Phillips head screws. See figure 7.

WARNING

Drive clutch adjustment must be checked before the unit is operated, as described in the operation section.

Download from Www.Somanuals.com. All Manuals Search And Download.

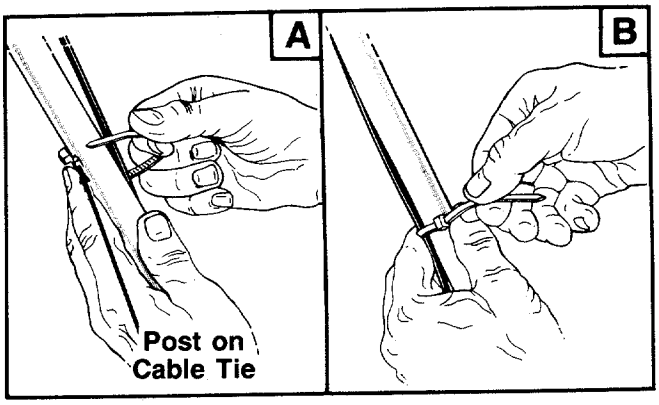

FIGURE 8.

SECURING THE CABLES (Hardware E)

Secure all control cables to the handle as follows.

A. Insert posts on cable ties into holes provided on both sides of the handles, one on each side of the upper handle and two on each side of the lower handle. The holes may be either on the inside or outside of the handles. See figure 8A.

B. Secure the cables to the handle with the cable ties. See figure 8B.

C. Trim excess ends of cable ties.

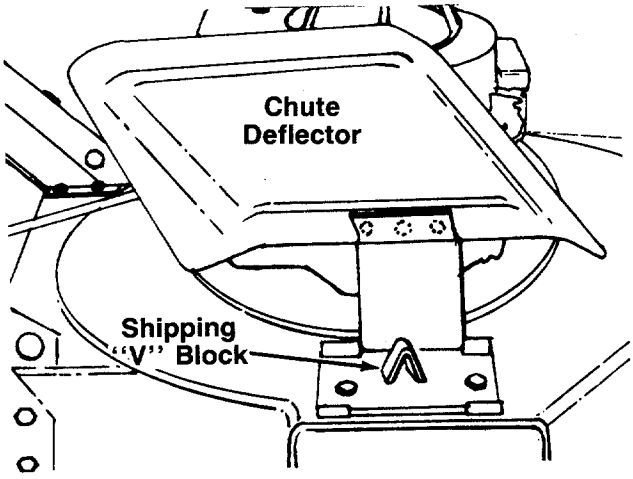

FIGURE 9.

FINAL ASSEMBLY OF MOWER

1. The chute deflector on your mower is held in an upright position by a "V" block for shipping purposes only. This "V" block must be removed and discarded before the mower is put into operation. See figure 9.

   To remove the "V" block, pull the spring-loaded chute toward the engine. Remove the "V" block and carefully lower the chute into operating position, keeping fingers out of the way.

2. Attach hub caps to the front wheels by lining up the four tabs on the hub caps with the four holes in the wheels. Push to lock in position.

3. Make certain **all** nuts and bolts are tightened securely.

CONTROLS

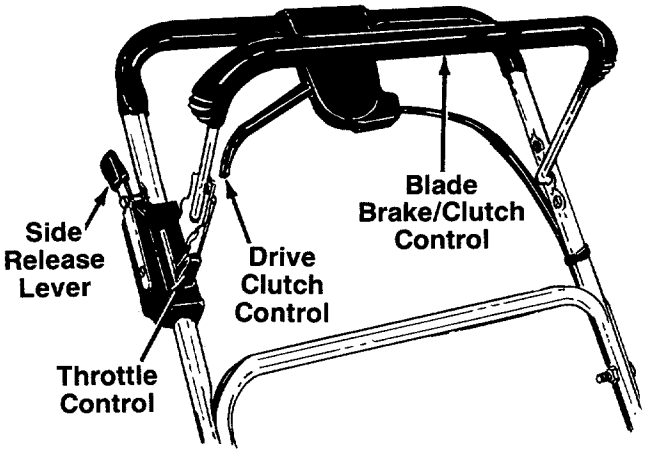

FIGURE 10.

THROTTLE CONTROL

The throttle is located on the right side of handle. It controls engine speed. See figure 10.

DRIVE CLUTCH CONTROL

Squeezing the drive clutch control engages the drive mechanism to the rear wheels. Releasing the clutch control stops the rear wheels from driving. Release the drive clutch control to slow down when negotiating an obstacle, making a turn or stopping. See figure 10.

BLADE BRAKE/CLUTCH CONTROL

WARNING
THIS CONTROL MECHANISM IS A SAFETY DEVICE. NEVER ATTEMPT TO BYPASS ITS OPERATIONS

The blade brake/clutch control is located on the upper handle of the mower. The blade brake/clutch handle engages and disengages the blade.

To engage the blade, pull the side release lever away from the unit. See figure 10. Pull the blade brake/clutch control handle against the upper handle. Release side lever.

Release the blade brake/clutch control handle to stop the blade from turning.

Download from Www.Somanuals.com. All Manuals Search And Download.

OPERATION

FIGURE 11.

Keep hands and feet away from the chute area on cutting deck. See figure 11.

NOTE

For shipping purposes your mower is set with the wheels in a low cutting height position. For best results raise the cutting position until it is determined which height is best for your lawn. See cutting height adjustment section.

GAS AND OIL FILL-UP

Service the engine with gasoline and oil as instructed in the separate engine manual packed with your mower. Read instructions carefully.

NOTE

Your unit has been shipped without oil; however, a small amount of oil may be present from the factory. Do not overfill.

WARNING

Never fill fuel tank indoors, with engine running or until the engine has been allowed to cool for at least two minutes after running.

BEFORE STARTING

Before each use, check for proper drive clutch operation by performing the following before starting the engine:

With the drive clutch control released, push mower forward. It should move freely. **Pull mower backward. It should move freely.**

If it does not and the rear wheels tend to lock up, the clutch may not be releasing completely. Do not start the engine until corrections have been made. Check the control cable for severe bend, kinks and binding, or grass build-up in the pulley grove. Correct and adjust as required.

TO START ENGINE

WARNING

When starting the unit for the first time, face the mower against a solid object such as a wall, fence, etc. Start the unit, and if it shows any signs of motion with the drive clutch control disengaged, shut the engine off immediately. Check the position of the drive clutch control cable. The plastic fitting must be assembled in the first adjustment position inside the housing, all the way to the right, as shown in figure 6.

1. Attach spark plug wire to spark plug.
2. Open fuel shut-off valve, located beneath the fuel tank. See figure 12.

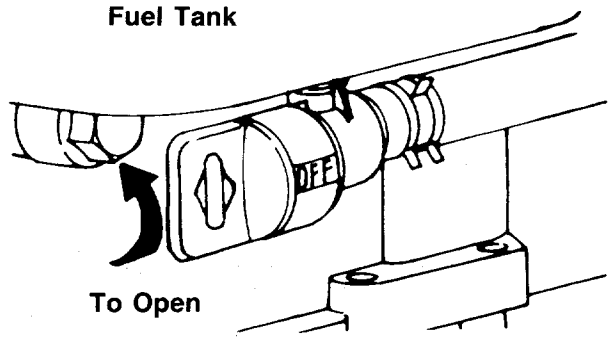

FIGURE 12.

3. Move throttle control lever to CHOKE position.
4. With the blade brake/clutch handle **released,** crank engine by pulling recoil starter with a quick firm pull. Do not pull out so far that rope stops with a jerk as this will cause rope failure. Do not allow rope and handle to snap back into place.
5. After engine starts, move throttle control to desired engine speed.

TO STOP ENGINE

1. Move throttle control lever to STOP position.
2. Disconnect spark plug wire from spark plug and ground against the engine to prevent accidental starting while equipment is unattended.

Download from Www.Somanuals.com. All Manuals Search And Download.

NOTE

If any problems are encountered, refer to the Trouble Shooting Chart on page 21.

TO ENGAGE THE BLADE

1. Start engine as instructed on page 10. Allow the engine to warm up for **one minute** before attempting to engage the blade.
2. To engage the blade, pull the side release lever away from the unit. Pull the blade brake/clutch control handle down against the upper handle. Release the side lever. See figure 10.

NOTE

If a warm engine falters or stalls when attempting to engage the blade, refer to Carburetor Adjustment Section of this owner's manual.

3. Release the blade brake/clutch control handle to stop the blade from turning.

NOTE

Always release the blade brake/clutch control handle before stopping the engine. If the engine begins to stall, release the blade brake/clutch control handle immediately.

Should the engine stall with the blade brake/clutch control in the operating position (control handle **not** released), difficulty may be encountered in pulling the starter rope to restart the engine. Proceed as follows.

1. Disconnect the spark plug wire from the spark plug.
2. Move the throttle lever to STOP position.
3. Hold the blade brake/clutch control in the engaged position.
4. While holding the blade brake/clutch control handle in this position, pull the starter rope.
5. As the starter rope is being pulled, release the blade brake/clutch control handle.

The starter rope should now operate correctly. Reconnect the spark plug wire for normal operation.

USING YOUR ROTARY MOWER

Be sure that lawn is clear of stones, sticks, wire, or other objects which could damage lawn mower or engine. Such objects could be accidently thrown by the mower in any direction and cause serious personal injury to the operator and others.

Operate a new engine at intermediate speeds and light load for the first few hours as you would a new automotive engine.

For the best results, do not cut wet grass because it tends to stick to the underside of the mower, preventing proper discharge of grass clippings, and could cause you to slip and fall. New grass, thick grass or wet grass may require a narrower cut. Blade speed should be adjusted to the condition of the lawn.

The best mowing pattern is one that allows the clippings to discharge towards the uncut part of the lawn. This permits recutting of the clippings to further pulverize them. When cutting high weeds, discharge towards cut portion, then recut at right angles to first direction.

For best results, cut off one-third or less of the total length of the grass. Lawn should be cut in the fall as long as there is growth.

This mower is designed to be operated at full throttle to give you the best cut and do the most effective job of bagging the cut grass.

IMPORTANT

If you strike a foreign object, stop the engine. Remove wire from spark plug, thoroughly inspect the mower for any damage, and repair the damage before restarting and operating the mower.

Striking a solid object can cause damage to the blade brake/clutch or to the engine crankshaft. Extensive vibration of the mower during operation is an indication of damage. The unit should be promptly inspected and repaired.

ADJUSTMENTS

WARNING

Do not at any time make any adjustment to lawn mower without first stopping engine and disconnecting spark plug wire.

DRIVE CLUTCH CONTROL ADJUSTMENT

If the unit does not self-propel with the drive clutch control engaged, remove the plastic cap from beneath the drive clutch control housing. Move the plastic fitting on the control cable to the next adjustment position on the left. Reassemble the plastic cap and retest. See figure 13.

Download from Www.Somanuals.com. All Manuals Search And Download.

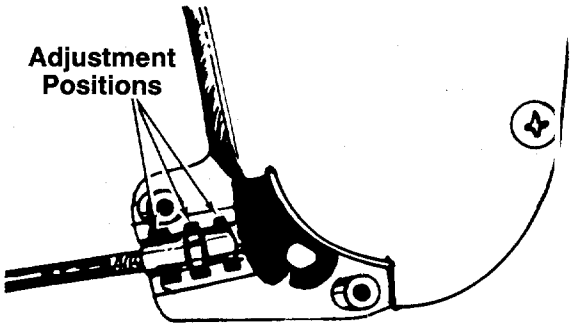

FIGURE 13.

CUTTING HEIGHT ADJUSTMENT

An adjusting plate and thumb lever at each wheel position provides cutting height adjustment. Each adjusting plate has nine height positions. Height of cut will be changed when the thumb lever is moved from one hole to another. Simply depress the lever towards wheel and move wheel and lever assembly to desired position.

Cutting height will be raised as front levers are moved to the front, and rear levers are lowered. Cutting height will be lowered as front levers are moved to the rear, and rear levers are raised. All wheels must be placed in the same relative position.

For rough or uneven lawns, move the wheels to a position which will give a higher cutting height.

THROTTLE

The throttle control wire assembly can be adjusted if necessary. Loosen the screw on the cable clamp closest to the control lever on engine. Adjust as instructed in step 4 of "Attaching the Throttle Control Cable" in Assembly Instructions.

CARBURETOR ADJUSTMENTS

WARNING

If any adjustments are made to the engine while the engine is running (e.g. carburetor), disengage all clutches and blades. Keep clear of all moving parts. Be careful of heated surfaces and muffler.

Minor carburetor adjustments may be required to compensate for differences in fuel, temperature, altitude and load. Refer to the separate engine manual packed with your mower.

NOTE

If a warm engine falters or stalls when attempting to engage the blade, the carburetor mixture should be adjusted 1/8 turn richer (counter-clockwise). See figure 14.

The carburetor should be adjusted with the air cleaner in place and the blade control handle in the blade disengaged position.

NOTE

A dirty air cleaner will cause an engine to run rough. Be certain air cleaner is clean before adjusting carburetor. Refer to the separate engine manual.

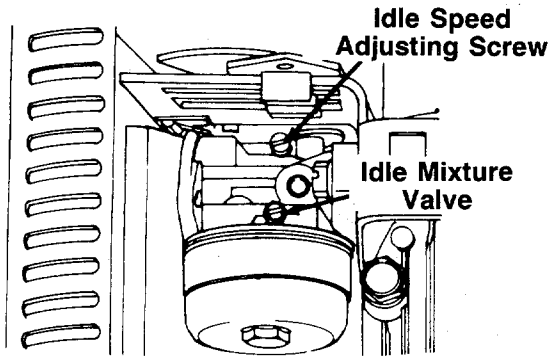

FIGURE 14.

LUBRICATION

WARNING

Always stop engine and disconnect spark plug wire before cleaning, lubricating or doing any kind of work on lawn mower.

Blade Brake/Clutch—Lubricate the pivot points on the blade brake/clutch handle and the cable at least once a season with light oil. The control must operate freely in both directions.

Chute Deflector—The torsion spring and pivot point should be lubricated periodically with light oil to prevent any rust or binding. Deflector must work freely.

Wheels—Mower is provided with ball bearing wheels. Lubricate at least once a season with light oil. Also, if the wheels are removed for any reason, lubricate the surface of the axle bolt and the inner surface of the wheel with light oil. A 4 oz. plastic bottle of light oil lubricant is available. Order part number 737-0170. Engine oil may also be used.

Engine—Follow engine manual for lubrication instructions.

Throttle—Periodically lubricate throttle control lever and throttle wire assembly with a few drops of light oil for ease of operation.

Download from Www.Somanuals.com. All Manuals Search And Download.

Chain—The chain should be lubricated periodically with a few drops of light oil to prevent any rust or binding. Use very little or no oil if unit is being used in a dusty or sandy area.

Rear Wheel Drive—Both rear wheels are driven by a pawl and ratchet drive. Lubricate the pawl and ratchet once a season with a silicone type lubricant.

Figure 15 shows the right rear hub cap. To take off the rear hub caps, remove the four screws around the edge of the hub cap. A cotter pin holds the ratchet in place. The pawl must pivot freely. Clean with a solvent, replace any broken or worn parts and lubricate.

The pawl and ratchet on the left rear hub cap are assembled facing the opposite way.

After reassembling, test the operation of the drive without the engine running. Engage the clutch and pull the mower backwards. Both wheels should lock. Push the mower forward and both wheels should rotate.

NOTE

The wheels will "click" when the mower is pushed forward.

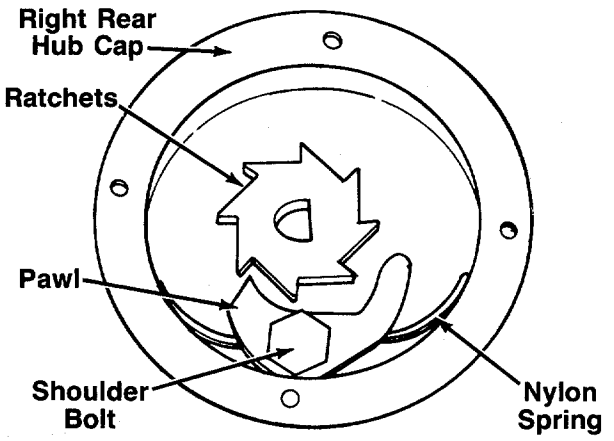

FIGURE 15.

MAINTENANCE

WARNING

Be sure to disconnect and ground the spark plug wire before performing any repairs or maintenance.

NOTE

When tipping the unit, empty the fuel tank and keep engine spark plug side up.

TROUBLE SHOOTING

Refer to page 21 of this manual for trouble shooting information.

CUTTING BLADE

To remove the cutting blade for sharpening or replacement, remove the two hex nuts and lock washers which hold the blade to the blade brake/clutch. Protect hands by using heavy gloves or a rag to grasp the cutting blade. See figure 16.

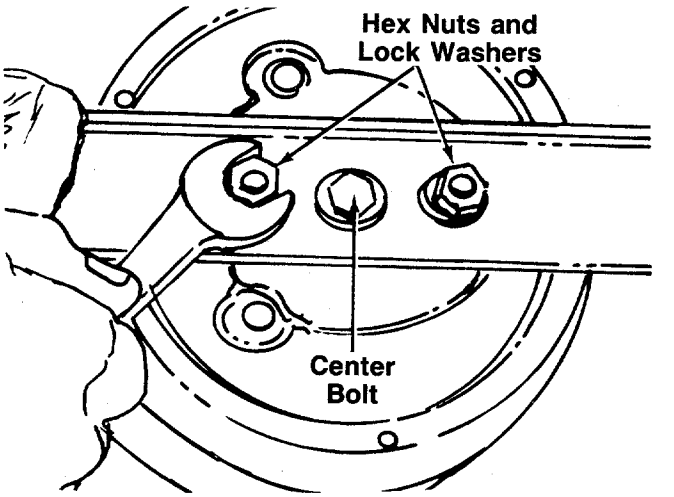

FIGURE 16.

When sharpening the blade, follow the original angle of grind as a guide. It is **extremely important** that each cutting edge receives an equal amount of grinding to prevent an unbalanced blade. An unbalanced blade will cause excessive vibration when rotating at high speeds, may cause damage to the mower and could break, causing personal injury.

The blade can be tested for balance by balancing it on a round shaft screwdriver. Remove metal from the heavy side until it balances evenly.

When replacing the blade, be sure to install the blade with the side of the blade marked "Bottom" (or with part number) facing the ground when the mower is in the operating position.

Blade Mounting Torque

Make certain that the center bolt which secures the blade brake/clutch and the two hex nuts which secure the blade are tightened to between 350 inch pounds (minimum) and 600 inch pounds (maximum).

To insure safe operation of your unit, ALL nuts and bolts must be checked periodically for correct tightness.

DECK

The underside of mower deck should be cleaned after each period of use as grass clippings, leaves, dirt and other matter will accumulate. This accumulation of grass clippings, etc., is undesirable as it will invite rust and corrosion and may cause an uneven discharge of grass clippings at the next cutting.

Download from Www.Somanuals.com. All Manuals Search And Download.

The deck may be cleaned by tilting the mower forward or on its side and scraping clean with a suitable tool or by washing with a stream of water from a garden hose.

NOTE

Do not direct the stream of water at a hot engine as damage to the engine may result.

ENGINE

Refer to separate engine manual for all engine maintenance instructions.

Maintain **engine oil** as instructed in the separate engine manual packed with your unit. Read and follow instructions carefully.

Service **air cleaner** every 25 hours under normal conditions. Clean every few hours under extremely dusty conditions. Poor engine performance and flooding usually indicates that the air cleaner should be serviced.

The **spark plug** should be cleaned and the gap reset once a season. Spark plug replacement is recommended at the start of each mowing season; check engine manual for correct plug type and gap specifications.

BELT REPLACEMENT

1. Place a piece of plastic film under the gasoline cap and tighten it. The plastic prevents gasoline from draining from the air vent in the cap.
2. Tip the mower on its left side. Remove the two hex nuts and lock washers on the blade. Remove the blade from the blade brake/clutch. Refer to figure 16.
3. Remove the four carriage bolts, nuts and lock washers holding the lower deck to the upper deck. A ½″ wrench is required. See figure 17.

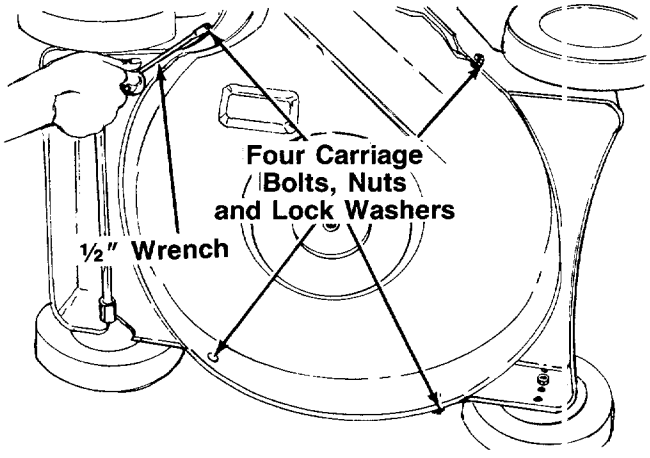

FIGURE 17.

4. Remove the right hand rear wheel hub cap by removing four screws. A phillips screwdriver is required.
5. Remove cotter pin and ratchet. A pair of pliers is required. See figure 18.

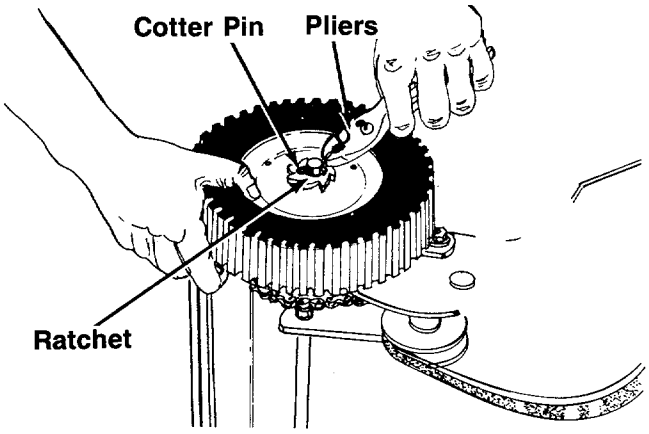

FIGURE 18.

6. Lift the rear wheel off the rear axle.
7. Remove the pivot bracket assembly. A 9/16″ wrench is required. Remove the hex jam nut and belleville washer as shown in figure 19.

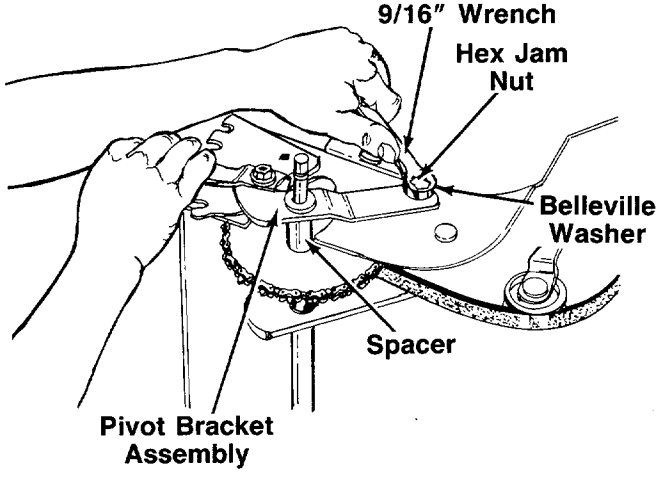

FIGURE 19.

8. Lift off the pivot bracket assembly and spacer. See figure 19.
9. Slide the support link down the rear axle, removing it from the side of deck and pulley sprocket assembly. See figure 20.
10. Remove the spacer from pulley sprocket assembly. See figure 20.

Download from Www.Somanuals.com. All Manuals Search And Download.

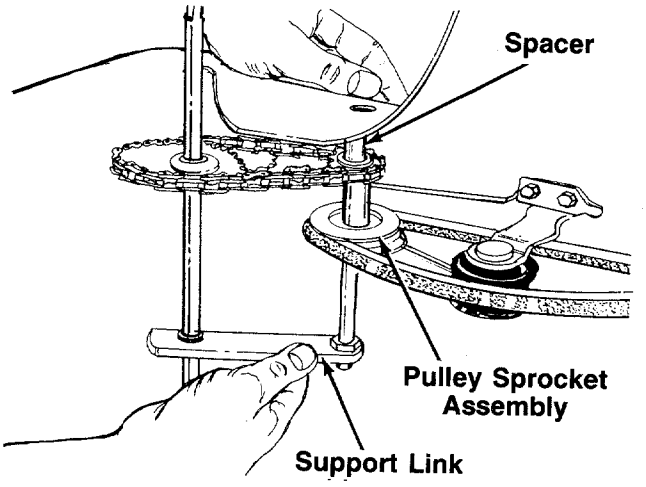

FIGURE 20.

11. Lift the chain off the sprocket as shown in figure 21. Lift the V-belt off the pulley sprocket assembly.
12. Lift the V-belt off the engine pulley and idler pulley. See figure 21.

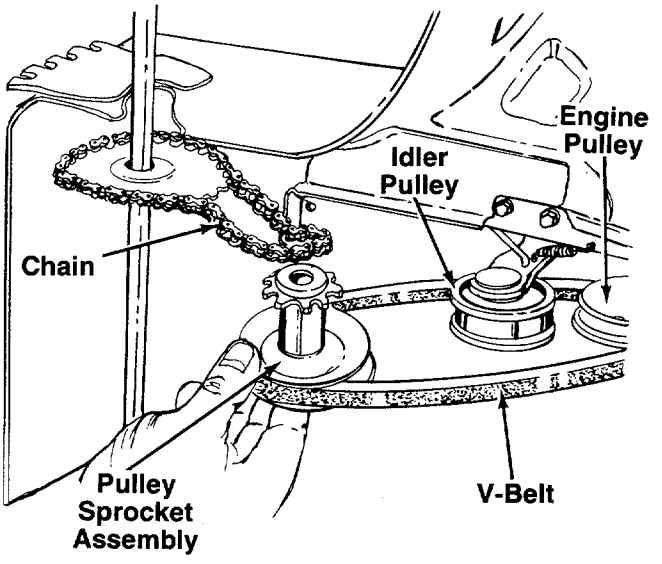

FIGURE 21.

13. Reassemble new belt in reverse order.

IMPORTANT

Be sure to remove plastic from beneath gas cap.

BLADE BRAKE/CLUTCH

This unit is equipped with a blade brake/clutch. If for some reason the blade brake/clutch becomes inoperative, it is suggested that all repair work on the blade brake/clutch should be performed by an authorized service dealer. The unit should be inspected by an authorized service dealer if any of the following conditions are noticed.

1. Frayed clutch control cable.
2. Leaking oil seal (oil collection on the floor during mower storage).
3. Extensive vibration of the unit.

Blade Brake/Clutch Removal

1. Disconnect the spark plug wire and ground it against the engine block.
2. Empty fuel tank and drain oil from crankcase.
3. Remove the cable ties which secure control cables to the handle.
4. Disconnect the blade brake/clutch cable from the clutch control handle by removing the push cap, using a pair of pliers.

NOTE

A new push cap is needed for reassembly.

5. Remove the two truss machine screws on the inside of the control housing as shown in figure 22.

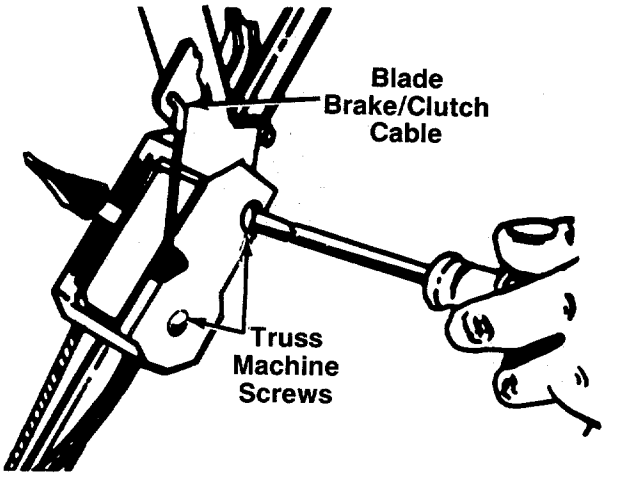

FIGURE 22.

6. Loosen the truss machine screw on the outside of the control housing until the two halves of control housing can be separated enough for the control cable to be freed. Slide the blade brake/clutch cable out of the control housing.
7. Retighten the truss machine screws on the control housing.
8. Disconnect the throttle control cable from the engine by loosening screw on engine and disconnecting the "Z" fitting. Refer to figure 5.
9. Tip the mower on its side. Remove the blade by removing two hex nuts and lock washers. Refer to figure 16.

Download from Www.Somanuals.com. All Manuals Search And Download.

CAUTION

When reassembling, tighten hex nuts to between 350 and 600 in. lbs.

10. Remove the center bolt as follows.
    a. Insert a screwdriver into the slot provided in the blade brake/clutch housing where the control cable enters housing. See figure 23.
    b. Place a 9/16" wrench on the center bolt. Turn the wrench slowly until the screwdriver catches in a groove provided inside the clutch. The screwdriver will now keep the clutch from turning, and the center bolt, and two belleville washers may be removed.

CAUTION

Upon reassembly, be certain to tighten center bolt to between 350 and 600 in. lbs.

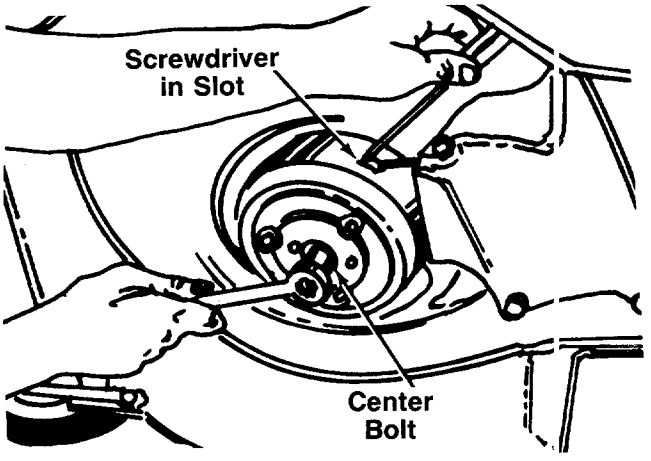

FIGURE 23.

11. Support the engine with one hand. Remove the three self-tapping screws which secure the deck and blade brake/clutch to the engine. A ½" socket wrench is required. See figure 24.

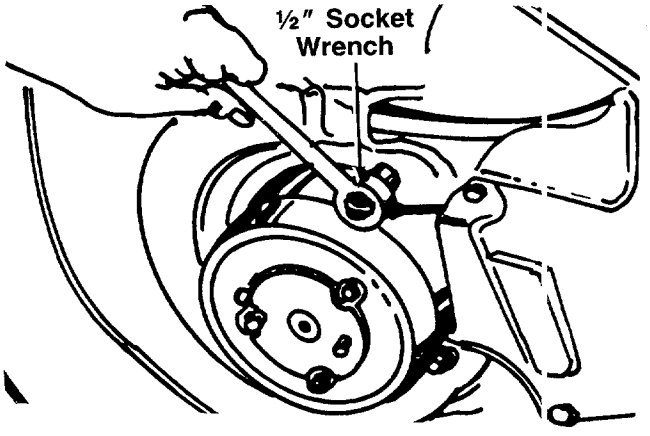

FIGURE 24.

12. Slide the blade brake/clutch cable through the hole in the deck as you lift off the engine and blade brake/clutch. Be careful not to kink control cable.
13. Remove blade brake/clutch from engine crankshaft.

Blade Brake/Clutch Installation

1. Place the new blade brake/clutch on engine crankshaft. Line up holes on blade brake/clutch with mounting holes on engine.
2. Place the two belleville washers onto crankshaft. Cupped side of washers must be against the blade brake/clutch. Secure with hex bolt finger tight only.
3. Place cable through engine mounting hole on deck.
4. Reverse steps 1 through 12 of preceding section for reassembly.

OFF-SEASON STORAGE

The following steps should be taken to prepare lawn mower for storage.

1. Clean and lubricate mower thoroughly as described in the lubrication instructions.
2. Refer to engine manual for correct engine storage instructions.
3. Coat mower's cutting blade with chassis grease to prevent rusting.
4. Store mower in a dry, clean area.

NOTE

When storing any type of power equipment in an unventilated or metal storage shed, care should be taken to rustproof the equipment. Using a light oil or silicone, coat the equipment, especially the bearings and cables.

HANDLE STORAGE

The handle can be stored in an upright position to take less space. Move hairpin clips to outer hole on weld pins (see figure 1). Grasp the lower handle at the bottom and push inward slightly. Tip the handle forward. It will lock in this position. Reverse this procedure to place the handle in the operating position.

NOTE

Be careful not to kink or pinch blade brake/clutch cable when storing the handle.

Download from Www.Somanuals.com. All Manuals Search And Download.

NOTE

The use of any accessory on this Rotary Mower other than those manufactured by the mower manufacturer is **not** recommended.

GRASS CATCHER Model 066 is available as optional equipment for the mower shown in this manual.

WARNING

1. DO NOT operate the mower without the entire grass catcher or chute deflector in place.
2. DO NOT operate the mower without the protective shield on the rear of the deck in place.

NOTE

Under normal usage bag material is subject to wear and should be checked periodically. Be sure any replacement bag complies with the mower manufacturer's recommendations.

For replacement bags, use only factory authorized replacement bag No. 764-0217.

Download from Www.Somanuals.com. All Manuals Search And Download.

Model 234

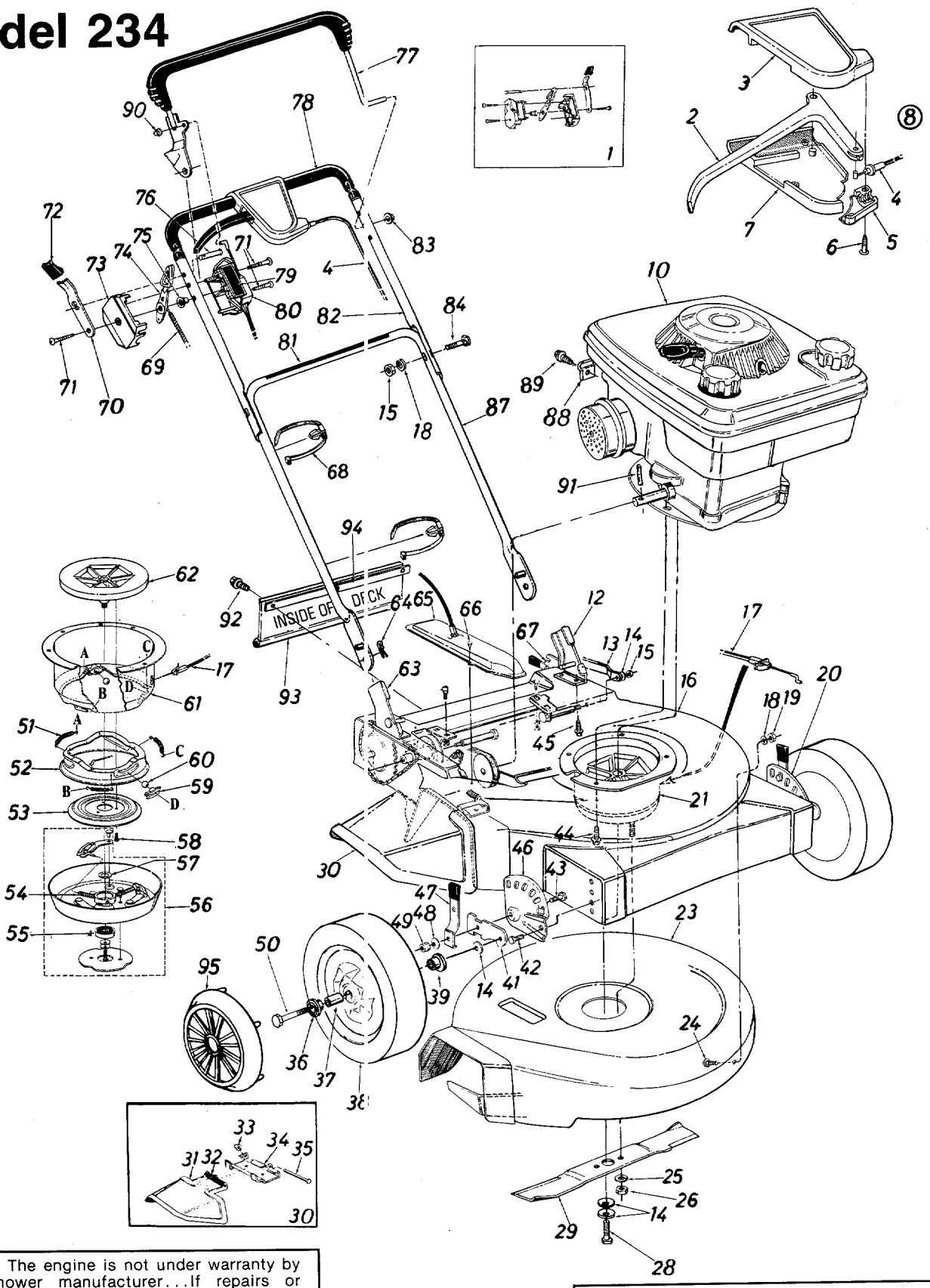

NOTE: The engine is not under warranty by the mower manufacturer...If repairs or service is needed on the engine, please contact your nearest authorized engine service outlet. Check the "Yellow Pages" of your telephone book under "Engines—Gasoline."

Find It Fast In The Yellow Pages

NOTE

Specifications subject to change without notice or obligation.

Download from Www.Somanuals.com. All Manuals Search And Download.

Model 234

PARTS LIST FOR MODEL 234 ROTARY MOWER

REF. NO.	PART NO.	COLOR CODE	DESCRIPTION	NEW PART
1	753-0431		Control Housing Comp.	
2	731-0620		Control Lever	
3	731-0617		Control Cover Half—Upper	
4	746-0464		Drive Clutch Cable—59″	
5	731-0619		Cable Mounting Cap	
6	710-0841		Flat "C" Sunk Hd. Tap Scr. #10 x .75″ Lg.	
7	731-0618		Control Cover Half—Lower	
8	753-0362		Clutch Control Housing Comp.	
10	—		Engine	
12	12935		Handle Mount Brkt. Ass'y.—L.H.	
13	14927		Pivot Brkt. Ass'y.—L.H.	
14	736-0105		Belleville Wash. 3/8″ I.D.	
15	712-0267		Hex Nut 5/16-18 Thd.*	
16	16025	463	21″ Deck Ass'y.—Upper	
17	746-~~0488~~	0400A	Blade Clutch Cable—46″ Lg.	
18	736-0119		L-Wash. 5/16″ I.D.*	
19	712-0267		Hex Nut 5/16-18 Thd.*	
20	10941		Height Adj. Ass'y. Comp.—L.H.	
	10935		Index Plate Ass'y.—L.H.	
21	717-0488		Blade Brake/Clutch Ass'y.—Comp.	
23	11695		Lower Deck Ass'y.	
24	710-0260		Carriage Bolt 5/16-18 x .62″*	
25	736-0169		L-Wash. 3/8″ I.D.*	
26	712-0328		Hex Nut 3/8-24 Thd. (Grade 8)	
28	710-0818		Hex Bolt 3/8-24 x 2.00″ Lg. (Grade 8)	
29	742-0221		21″ Blade	
30	11679	463	Chute Deflector Ass'y.—Comp.	
31	11141	463	Chute Deflector	
32	732-0253		Torsion Spring	
33	726-0106		Push Nut ¼″ Rod	
34	11130		Adapter Plate	
35	711-0555		Pivot Pin	
36	741-0267		Ball Bearing 3/8″ I.D.	
37	750-0434		Spacer	
38	734-0645		Wheel Ass'y. Comp. 8 x 1.75	
39	741-0484		Ball Bearing ½″ I.D.	
41	10937		Pivot Bar	
42	710-0209		Hex Sems Bolt 3/8-16 x .62″	
43	711-0498		Shoulder Bolt	
44	710-0654		Hex Wash. Hd. TT-Tap Scr. 3/8-16 x 1″ Lg.	
45	710-0603		Hex Wash. Hd. "B"-Tap Scr. 5/16 x ½″ Lg.	
46	10938		Height Adjuster Ass'y. Comp.—R.H.	
	10934		Index Plate Ass'y.—R.H.	
47	14082		Spring Lever Ass'y. w/Knob	
48	736-0219		Bell-Wash. .400″ I.D. x 1.13″	
49	712-0116		Hex Ins. L-Nut 3/8-24 Thd.	
50	710-0427		Axle Bolt	
51	732-0397		Extension Spring	
52	14305		Brake Cup Cone	
53	14304		Clutching Cone	
54	732-0396		Compression Spring	
55	741-0124		Ball Bearing	
56	14300		Clutch Blade Housing Ass'y.	
57	736-0333		Fl-Wash. .69″ I.D. x 1.06″	
58	710-0875		Hex TT-Tap L-Scr. ¼-20 x .75″ Lg.	
59	731-0520		Ball Block	
60	741-0326		Steel Ball ½″ Dia.	
61	14308		Clutch Housing	
62	719-0256		Fan Adapter	
63	12936		Handle Mount Brkt. Ass'y.—R.H.	
64	714-0104		Internal Cotter Pin 5/16″ Dia.	
65	16029	463	Belt Cover	
66	710-0224		Hex Wash. Hd. "AB" Tap Scr. #10 x .50″ Lg.	
67	10641		Index Plate Ass'y.—L.H.	
68	726-0240		Cable Tie	
69	746-0631		Throttle Wire—43″	N
70	732-0401		Lockout Spring	
71	710-0796		Truss Mach. Tap Scr. #12 x 1.5″ Lg.	
72	720-0190		Spring Lever Knob	
73	731-0817		Control Panel Half	
74	731-0528		Throttle Control Lever	
75	731-0524		Control Disc Pin	
76	731-0607		Lock Pin	
77	731-0610		Control Handle—R.H.	
78	718-0145		Grip	
79	777-5772		Control Label—Throttle	
80	731-0816		Clutch Panel Half	
81	777-5775		Instruction Label—Handle	
82	749-0537		Upper Handle	
83	726-0135		Cap Speed Nut 5/16″ Rod	
84	710-0671		Curved Carriage Bolt 5/16-18 x 1.38″ Lg.	
87	749-0373		Lower Handle	
88	751-0442		Casing Clamp	
89	710-0436		Hex Sems Scr. #10-32 x .62″	
90	726-0245		Push Cap	N
91	715-0144		Spring Pin 3/16″ Dia. x 1.5″	
92	710-0776		Hex Wash. Hd. AB-Tap Scr. ¼ x .62″ Lg.	
93	731-0575		Rear Flap	
94	14836		Retaining Strip	
95	731-0124		Hub Cap	
—	8234-000-7		Hardware Pack	

*For faster service obtain standard nuts, bolts and washers locally. If these items cannot be obtained locally, order by part number and size as shown on parts list.

(463—Topflite Red)

If color or finish is important when ordering parts, use the appropriate color code shown above [i.e. (part no.)-463 for Topflite Red Finish].

Download from Www.Somanuals.com. All Manuals Search And Download.

Model 234

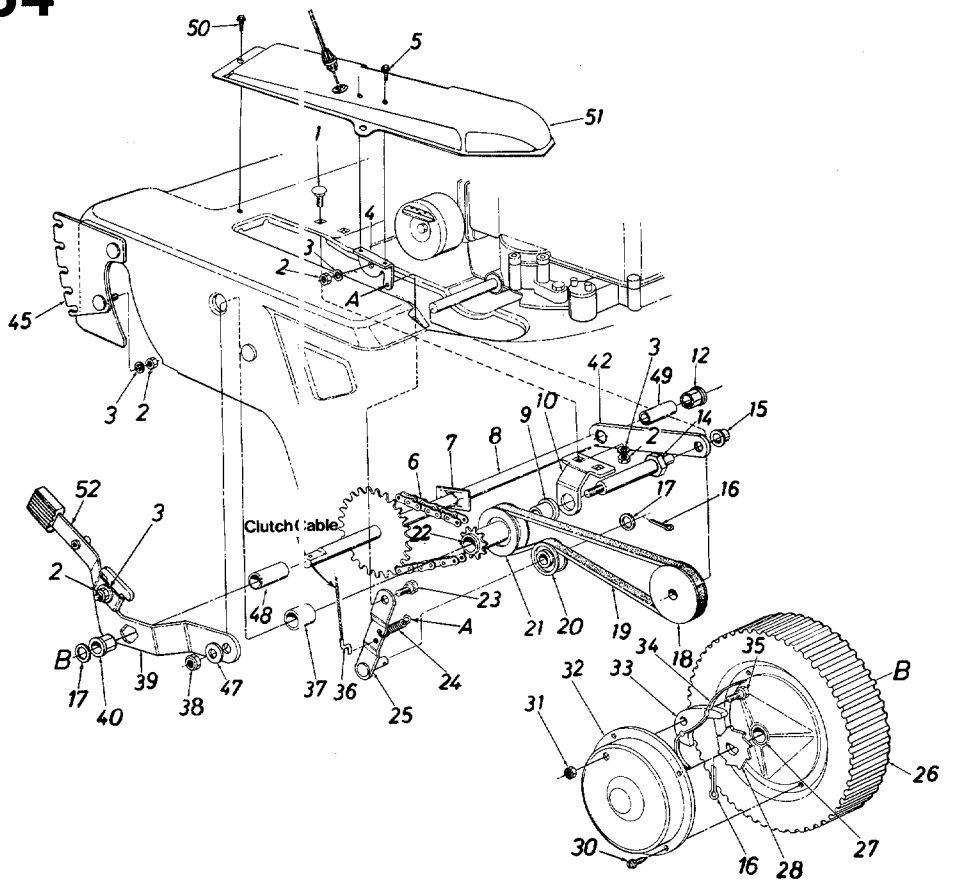

PARTS LIST FOR MODEL 234 ROTARY MOWER

REF. NO.	PART NO.	COLOR CODE	DESCRIPTION	NEW PART	REF. NO.	PART NO.	COLOR CODE	DESCRIPTION	NEW PART
1	710-0260		Carriage Bolt 5/16-18 x .62"*		25	14181		Idler Bracket Ass'y.	
2	712-0267		Hex Nut 5/16-18 Thd.*		26	734-1411		Rear Wheel Ass'y. Comp.	
3	736-0119		L-Wash. 5/16" I.D.*		27	741-0180		Flange Bearing .50" I.D.	
4	14245		Cam Bracket		28	748-0187		Ratchet—Rear Wheel	
5	710-0892		Hex "AB" Tap Scr. ¼-20 x .62"		30	710-0748		"AB" Tap Scr. #12 x .50"	
					31	712-0324		Hex Ins. L-Nut ¼-20 Thd.	
6	713-0144		#48 Chain ½" Pitch x 31 Links		32	10647		Hub Cap	
					33	748-0188		Pawl—Rear Wheel	
	713-0122		#48 Master Link ½" Pitch		34	10622		Spring—Nylon	
7	726-0163		Push Clip .692 Dia.		35	738-0137		Shld. Bolt .342" Dia. x .268"	
8	10646		Rear Shaft Ass'y.		36	746-0464		Drive Clutch Cable 59" Lg.	
9	741-0249		Flange Bearing .631" I.D.		37	750-0477		Spacer .635 I.D. x .88 O.D.	
10	10644		Bracket		38	712-0342		Hex Jam Nut 5/16-18 Thd.*	
12	748-0142		Flange Bearing		39	14926		Pivot Bracket Ass'y.—R.H.	
14	738-0473		Shld. Bolt .625" Dia. x 3.380 (Special)			14927		Pivot Bracket Ass'y.—L.H.	
					40	741-0324		Flange Bearing	
15	726-0221		Cap Speed Nut .50" Dia.		42	12967		Support Link	
16	714-0115		Cotter Pin 1/8" Dia. x 1.0"*		45	10642		Index Plate Ass'y.—R.H.	
17	736-0160		Fl-Wash. .531 I.D. x .930 O.D.		46	710-0200		Hex Wash. Hd. Self-Tap Scr. #8 x .50" Lg.	
18	756-0384		Engine Pulley						
19	754-0114		"V"-Belt		47	736-0105		Belleville Washer	
20	756-0360		Plastic Flat Idler		48	750-0459		Spacer	
21	756-0191		Pulley w/Sprocket Ass'y.		49	750-0190		Spacer	
22	741-0181		Sleeve Bearing .62" I.D.		50	710-0224		Hex AB-Tap Scr. #10 x .50"	
23	738-0255		Shld. Bolt .375" Dia. x .171		51	16029		Belt Cover	
24	732-0357		Ext. Spring 1.12" Lg.		52	10531		Spring Lever Ass'y. w/Knob	

Download from Www.Somanuals.com. All Manuals Search And Download.

Trouble Shooting Chart

Problem	Cause	Remedy
1 Engine fails to start	A Check fuel tank for gas B Fuel shut-off valve closed C Spark plug lead wire disconnected D Throttle control lever not in the starting position E Faulty spark plug F Carburetor improperly adjusted, engine flooded G Old stale gasoline	A Fill tank if empty. B Open fuel shut-off valve. C Connect lead wire. D Move throttle lever to start position. E Clean, adjust gap or replace. F Remove spark plug, dry the plug, crank engine with plug removed, and throttle in off position. Replace spark plug and lead wire and resume starting procedures. G Drain and refill with fresh gasoline.
2 Hard starting or loss of power	A Spark plug wire loose B Carburetor improperly adjusted C Dirty air cleaner	A Connect and tighten spark plug wire. B Adjust carburetor. See separate engine manual. C Clean air cleaner as described in separate engine manual.
3 Operation erratic	A Dirt in gas tank B Dirty air cleaner C Water in fuel supply D Vent in gas cap plugged E Carburetor improperly adjusted	A Remove the dirt and fill tank with fresh gas. B Clean air cleaner as described in separate engine manual. C Drain contaminated fuel and fill tank with fresh gas. D Clear vent or replace gas cap. E Adjust carburetor. See separate engine manual.
4 Occasional skip (hesitates) at high speed	A Carburetor idle speed too slow B Spark plug gap too close C Carburetor idle mixture adjustment improperly set	A Adjust carburetor. See separate engine manual. B Adjust to .030″. C Adjust carburetor. See separate engine manual.
5 Idles poorly	A Spark plug fouled, faulty, or gap too wide B Carburetor improperly adjusted C Dirty air cleaner	A Reset gap to .030″ or replace spark plug. B Adjust carburetor. See separate engine manual. C Clean air cleaner as described in separate engine manual.
6 Engine overheats	A Carburetor not adjusted properly B Air flow restricted C Engine oil level low	A Adjust carburetor. See separate engine manual. B Remove blower housing and clean as described in separate engine manual. C Fill crankcase with the proper oil.
7 Excessive vibration	A Cutting blade loose or unbalanced B Bent blade	A Tighten blade. Balance blade. B Replace blade.

Note: For repairs beyond the minor adjustments listed above, contact your local service dealer.

Download from Www.Somanuals.com. All Manuals Search And Download.

PARTS INFORMATION

POWER EQUIPMENT PARTS AND SERVICE

Parts and service are available through the authorized service firms listed below. All orders should specify the model number of your unit, part numbers, description of parts and the quantity of each part required.

BRIGGS AND STRATTON, TECUMSEH AND PEERLESS PARTS AND SERVICE

Briggs & Stratton, Tecumseh and Peerless parts and service should be handled by your nearest authorized engine service firm. Check the yellow pages of your telephone directory under the listing **Engines—Gasoline,** Briggs & Stratton or Tecumseh Lauson.

NOTE: If any parts are found to be missing or defective upon assembly of this unit, write to advise the factory so that immediate replacement can be made.

ALABAMA	**BIRMINGHAM**	
Auto Electric & Carburetor Co.	2625 4th Ave. S.	35233
ARKANSAS	**NORTH LITTLE ROCK**	
Sutton's Lawn Mower Shop	5301 Roundtop Drive Box 368, Rt. 4	72117
CALIFORNIA	**PORTERVILLE**	
Billious	75 North D Street	93257
COLORADO	**DENVER**	
Spitzer Industrial Products Co.	6601 N. Washington St.	80229
FLORIDA	**JACKSONVILLE**	
Radco Distributors	4909 Victor St. Box 5459	32207
	HIALEAH	
Small Eng. Dist.	7995 W. 26th Court	33016
GEORGIA	**EAST POINT**	
East Point Cycle & Key Inc.	2834 Church St.	30344
ILLINOIS	**LYONS**	
Keen Edge Co.	8615 Ogden Ave.	60534
INDIANA	**ELKHART**	
Parts & Sales Inc.	2101 Industrial Pkwy.	46516
IOWA	**DUBUQUE**	
Power Lawn & Garden Equip.	2551 J.F. Kennedy	52001
LOUISIANA	**NEW ORLEANS**	
Suhren Engine Co.	8330 Earhart Blvd.	70118
MARYLAND	**TAKOMA PARK**	
Center Supply Co.	6867 New Hampshire Ave.	20912
MASSACHUSETTS	**SPRINGFIELD**	
Morton B. Collins Co.	300 Birnie Ave.	01107
MICHIGAN	**LANSING**	
Lorenz Service Co.	2500 S. Pennsylvania	48910
	MOUNT CLEMENS	
Power Equipment Dist.	340 Hubbard	48043
MINNESOTA	**HOPKINS**	
Hance Distributing Inc.	420 Excelsior Ave. W.	55343
MISSOURI	**EARTH CITY**	
Oscar Wilson Engine & Parts	4159 Shoreline Dr.	63045
	KANSAS CITY	
Automotive Equip. Service	3117 Holmes St.	64109
	ST. JOSEPH	
Ross-Frazer Supply Co.	8th and Monterey	64503
	ST. LOUIS	
Henzler, Inc.	2015 Lemay Ferry Rd.	63125
NEW JERSEY	**ALLOWAY**	
Piersons	Canal St.	08001
NEW MEXICO	**ALBUQUERQUE**	
Spitzer Eng. & Parts Co.	1023 Third Ave. N.W.	87103
NEW YORK	**CARTHAGE**	
Gamble Dist., Inc.	West End Ave.	13619
NORTH CAROLINA	**GREENSBORO**	
Dixie Sales Company	335 N. Green	27402
OHIO	**CARROLL**	
Stebe's Mid-State Mower Supply	Box 366, 71 High St.	43112
	CLEVELAND	
Bleckrie, Inc.	7900 Lorain Ave.	44102
	WADSWORTH	
National Central	687 Seville Rd.	44281
	YOUNGSTOWN	
Burton Supply Co.	1301 Logan Ave. Box 929	44501
OREGON	**PORTLAND**	
Kenton Supply Co.	8216 N. Denver Ave.	97217
PENNSYLVANIA	**HARRISBURG**	
EECO Inc.	4021 N. 6th St.	17110
	WILLOW GROVE	
Thompson Rubber Co.	850 Davisville Rd.	19090
	PITTSBURGH	
Bluemont Co.	11125 Frankstown Rd.	15235
	PUNXSUTAWNEY	
Frank Roberts & Sons	R.D. 2	15767
	SCRANTON	
Scranton Auto Ignition Co.	1133-35 Wyoming Ave.	18509
TENNESSEE	**KNOXVILLE**	
Ace Distributors	2103 Magnolia	37919
	MEMPHIS	
American Sales & Service, Inc.	3035-43 Bellbrook	38116
TEXAS	**DALLAS**	
Marr Brothers, Inc.	423 E. Jefferson	75203
	FORT WORTH	
Woodson Sales Corp.	6733 Baker Blvd. Hwy. 10	76118
	SAN ANTONIO	
Engine House Inc.	8610 Botts Lane P.O. Box 17867	78217
UTAH	**SALT LAKE CITY**	
Powered Products	1661 N. Beck St.	84116
VIRGINIA	**ASHLAND**	
RBI Corp.	101 Cedar Ridge Dr.	23005
WASHINGTON	**SEATTLE**	
Equip. Northwest	1410 14th Ave.	98122
WISCONSIN	**MILWAUKEE**	
Wisconsin Magneto Inc.	4727 N. Teutonia St.	53209

WARRANTY PARTS AND SERVICE POLICY (0686)

The purpose of warranty is to protect the customer from defects in workmanship and materials, defects which are NOT detected at the time of manufacture. It does not provide for the unlimited and unrestricted replacement of parts. Use and maintenance are the responsibility of the customer. The manufacturer cannot assume responsibility for conditions over which it has not control. Simply put, if it's the manufacturer's fault, it's the manufacturer's responsibility; if it's the customer's fault, it's the customer's responsibility.

CLAIMS AGAINST THE MANUFACTURER'S WARRANTY INCLUDES:

1. **Replacement of Missing Parts** on new equipment.
2. **Replacement of Defective Parts** within the warranty period.
3. **Repair of Defects** within the warranty period.

All claims MUST be substantiated with the following information:

1. **Model Number, Serial Number and/or Data Code** of unit involved.
2. **Date** unit was purchased or first put into service.
3. **Date of Failure.**
4. **Nature of Failure.**

MTD PRODUCTS INC • P.O. BOX 36900 • CLEVELAND, OHIO 44136

Download from Www.Somanuals.com. All Manuals Search And Download.

Free Manuals Download Website

http://myh66.com

http://usermanuals.us

http://www.somanuals.com

http://www.4manuals.cc

http://www.manual-lib.com

http://www.404manual.com

http://www.luxmanual.com

http://aubethermostatmanual.com

Golf course search by state

http://golfingnear.com

Email search by domain

http://emailbydomain.com

Auto manuals search

http://auto.somanuals.com

TV manuals search

http://tv.somanuals.com